B1 INSTALLATION DRAWING

IF THIS DOCUMENT IS PRINTED IN HARDCOPY, IT IS FOR INFORMATION USE ONLY AND THEREFORE IS NOT SUBJECT TO UPDATING CONTROLS. ALWAYS REFER TO SOLIDWORKS VIEWER FOR LATEST ISSUE

FIRST ANGLE PROJECTION

THIS DRAWING IS CONFIDENTIAL AND IS SUPPLIED ON THE EXPRESS CONDITION THAT IT SHALL NOT BE LOANED OR COPIED OR DISCLOSED TO ANY OTHER PERSON OR USED FOR ANY OTHER PURPOSE WITHOUT THE WRITTEN CONSENT OF AP RACING LTD.

AP Racing
Wheler Road
Coventry
CV3 4LB
Tel: +44 024 7663 9595
Fax: +44 024 7663 9559
e-mail: sales@apracing.co.uk
Web site: HTTP://www.apracing.com

© AP Racing Ltd. 2005

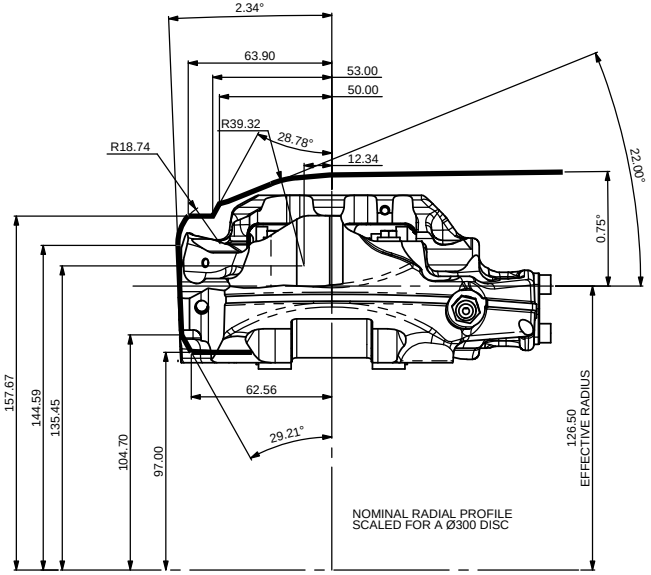

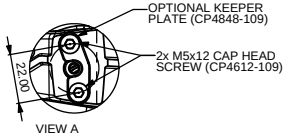

GENERAL DESCRIPTION:
4 PISTON DIFFERENTIAL BORE CALIPER TO SUIT UP TO Ø355 x 32 IRON DISC

APPLICATION:
RALLY

TECHNICAL INFORMATION:
TOTAL PISTON AREA: 45.9cm2
PISTON MATERIAL: STAINLESS STEEL
BODY MATERIAL: FORGED ALUMINIUM ALLOY
APPROXIMATE ASSEMBLY WEIGHT: 2.16Kg

INSTALLATION INFORMATION
DISC & CALIPER MOUNTING TOLERANCES TO BE SUCH THAT THE DISC IS CENTRAL TO THE CALIPER TO WITHIN ±0.5mm.
CALIPER TO BE MOUNTED WITHIN ±15° FROM VERTICAL.
DISC DIAMETRAL CLEARANCE SHOULD BE 2.5mm NOM. FROM DISC O.D. TO PATHWAY.
BLEED SCREW MAX. TIGHTENING TORQUE 17Nm

KEY TO DIMENSIONS:
'PL': TOP OF PAD MATERIAL TO MOUNTING BOSS FACE WITH PAD SITTING DOWN ON LEDGE.

CALIPER PART NUMBERS
CP6840-4S4L - RIGHT HAND
CP6840-5S4L - LEFT HAND

ALL HYRAULIC THREADS M10x1MM

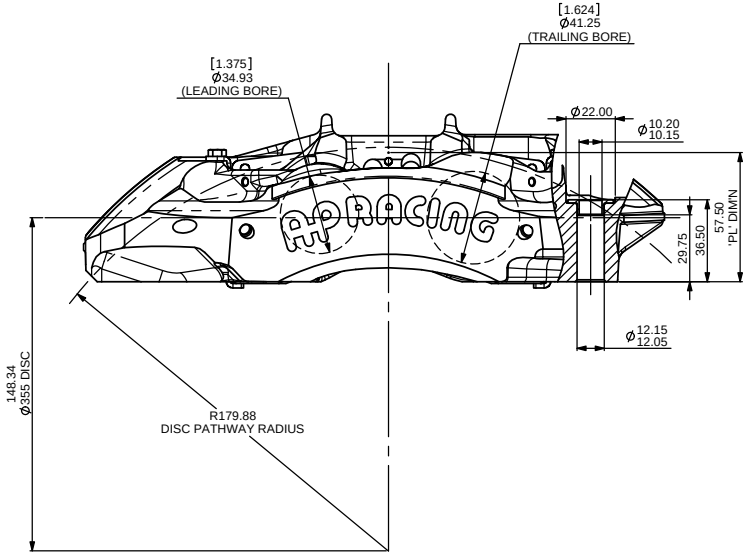

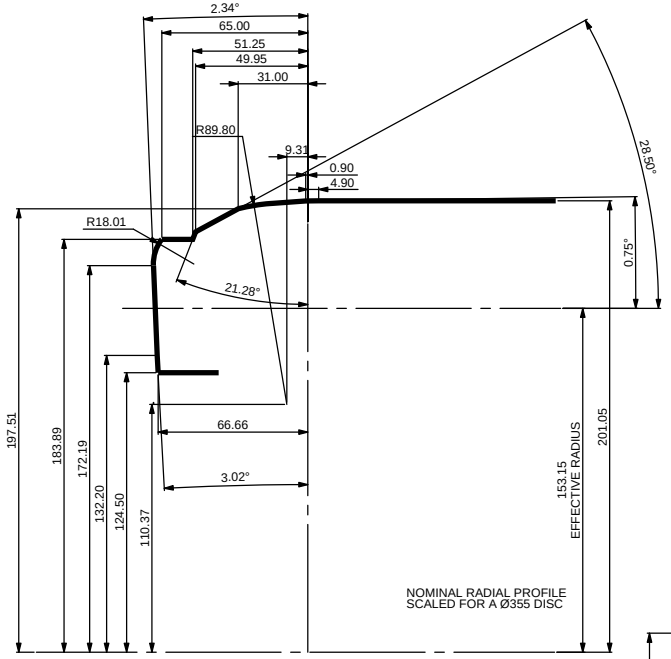

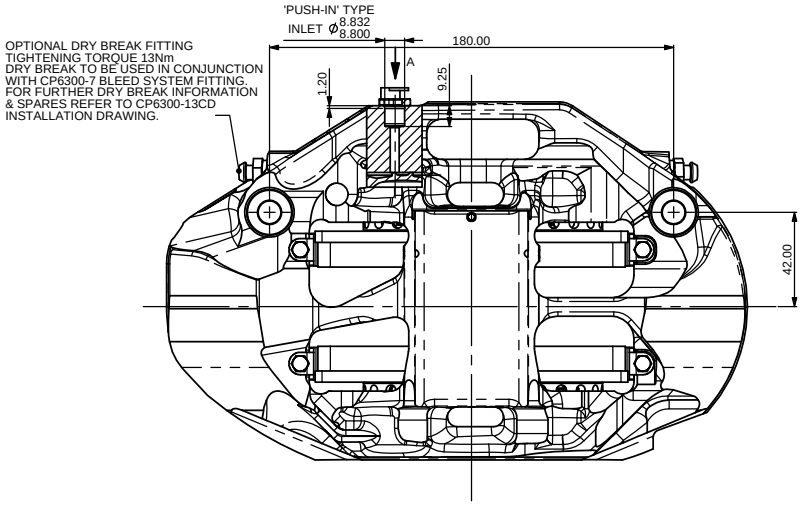

OPTIONAL DRY BREAK FITTING
TIGHTENING TORQUE 13Nm
DRY BREAK TO BE USED IN CONJUNCTION WITH CP6300-7 BLEED SYSTEM FITTING.
FOR FURTHER DRY BREAK INFORMATION & SPARES REFER TO CP6300-13CD INSTALLATION DRAWING.

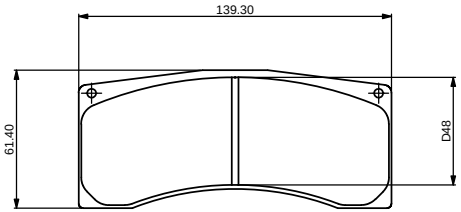

TARMAC PAD
CP6820D48 FAMILY IRON PAD
AREA - 63.2CM²
THICKNESS - 16MM
VOLUME - 69.5CM³

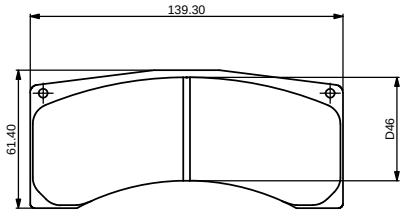

GRAVEL PAD
CP6820D46 FAMILY IRON PAD
AREA - 61.7CM²
THICKNESS - 16MM
VOLUME - 67.9CM³

Issue No	Alterations: Date & No.	Particulars	Zone	Initials
1	05/09/12 B6411	FIRST ISSUE	#	RS
2	06/09/12	REFERENCE TO LEADING CALIPER REMOVED.	L4	RS
3	04/12/12 B6411	RADIAL PROFILE WITH DUCT MOVED TO SHEET 2 RADIAL PROFILE WITHOUT DUCT ADDED TO SHEET 1	#	RS
4	04/12/12 B6411	PUSH-IN TYPE INLET DETAILS ADDED	H13	RS
5	22/01/13 B6717	DIMN Ø12.15/12.05 WAS Ø10.20/10.15 SHEET 2 - 7x TAPPED HOLES WAS 4x SHEET 3 - CP6720-162 ADDED TO TABLE	K17 M17	RS

SCALE 1:1	SHEET 1 OF 3
DRAWN	RSimpson
APPROVED	
DERIVED FROM	

TITLE
FORGED 4-POT RALLY CALIPER

DRG NO. CP6840-2CD

B1 INSTALLATION DRAWING

IF THIS DOCUMENT IS PRINTED IN HARDCOPY, IT IS FOR INFORMATION USE ONLY AND THEREFORE IS NOT SUBJECT TO UPDATING CONTROLS. ALWAYS REFER TO SOLIDWORKS VIEWER FOR LATEST ISSUE

FIRST ANGLE PROJECTION

THIS DRAWING IS CONFIDENTIAL AND IS SUPPLIED ON THE EXPRESS CONDITION THAT IT SHALL NOT BE LOANED OR COPIED OR DISCLOSED TO ANY OTHER PERSON OR USED FOR ANY OTHER PURPOSE WITHOUT THE WRITTEN CONSENT OF AP RACING LTD.

AP Racing
Wheler Road
Coventry
CV3 4LB
Tel: +44 024 7663 9595
Fax: +44 024 7663 9559
e-mail: sales@apracing.co.uk
Web site: HTTP://www.apracing.com

© AP Racing Ltd. 2005

Issue No	Alterations: Date & No.	Particulars	Zone	Initials

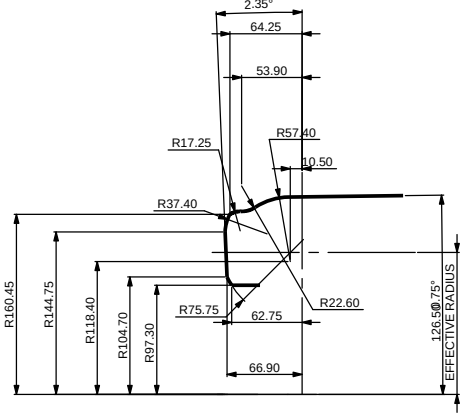

RADIAL PROFILE WITH DUCT SCALED FOR A Ø300 DISC

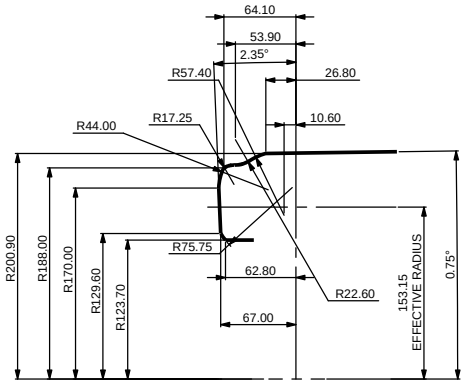

RADIAL PROFILE WITH DUCT SCALED FOR A Ø355 DISC

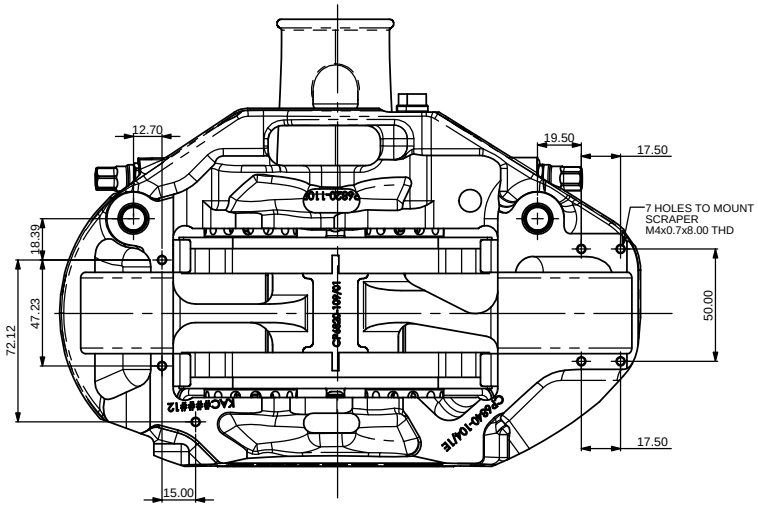

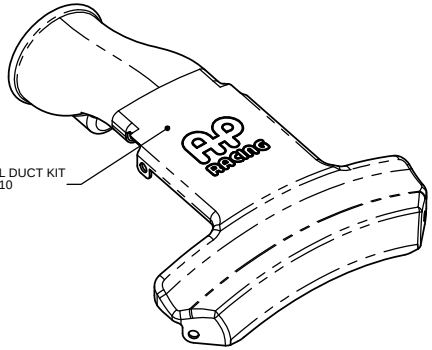

OPTIONAL DUCT KIT CP6820-110

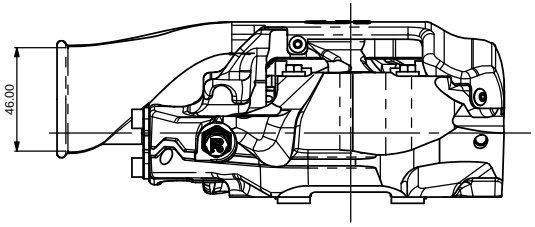

THE RECESS IN THE DUCT CAN BE COVERED WITH DUCK TAPE OR SIMILAR ONCE THE SCREW HAS BEEN FITTED TO CREATE A SMOOTH SURFACE FOR THE AIR FLOW

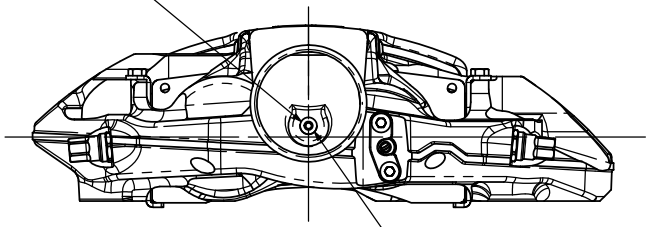

5x M4x0.70 BUTTON HEAD SCREWS TO RETAIN CARBON DUCT (INCLUDED IN CP6820-110 DUCT KIT)

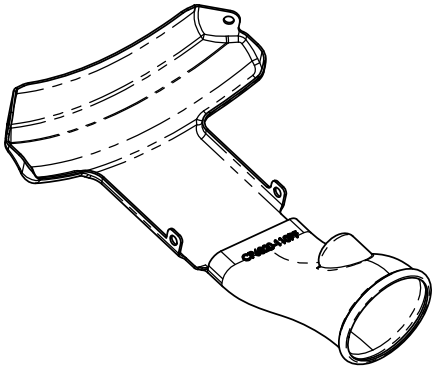

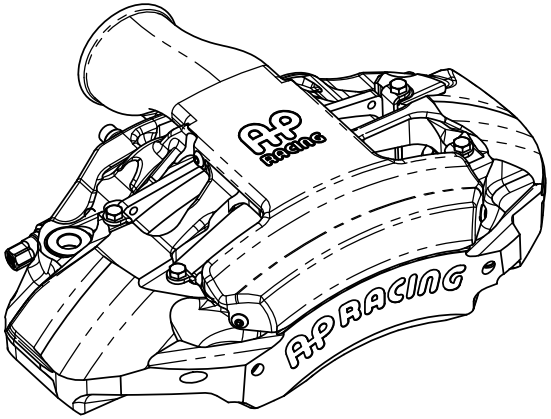

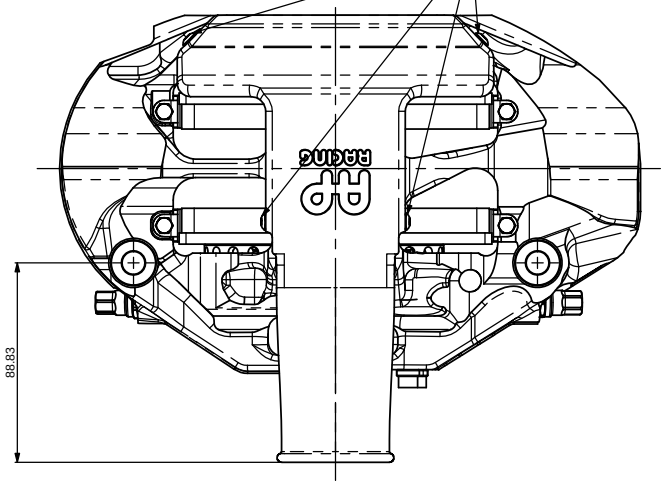

SCALE 1:1	SHEET 2 OF 3
DRAWN	RSimpson
APPROVED	
DERIVED FROM	

TITLE
FORGED 4-POT RALLY CALIPER

DRG NO. CP6840-2CD

B1 INSTALLATION DRAWING

IF THIS DOCUMENT IS PRINTED IN HARDCOPY, IT IS FOR INFORMATION USE ONLY AND THEREFORE IS NOT SUBJECT TO UPDATING CONTROLS. ALWAYS REFER TO SOLIDWORKS VIEWER FOR LATEST ISSUE

FIRST ANGLE PROJECTION

THIS DRAWING IS CONFIDENTIAL AND IS SUPPLIED ON THE EXPRESS CONDITION THAT IT SHALL NOT BE LOANED OR COPIED OR DISCLOSED TO ANY OTHER PERSON OR USED FOR ANY OTHER PURPOSE WITHOUT THE WRITTEN CONSENT OF AP RACING LTD.

AP Racing
Wheler Road
Coventry
CV3 4LB
Tel: +44 024 7663 9595
Fax: +44 024 7663 9559
e-mail: sales@apracing.co.uk
Web site: HTTP://www.apracing.com

© AP Racing Ltd. 2005

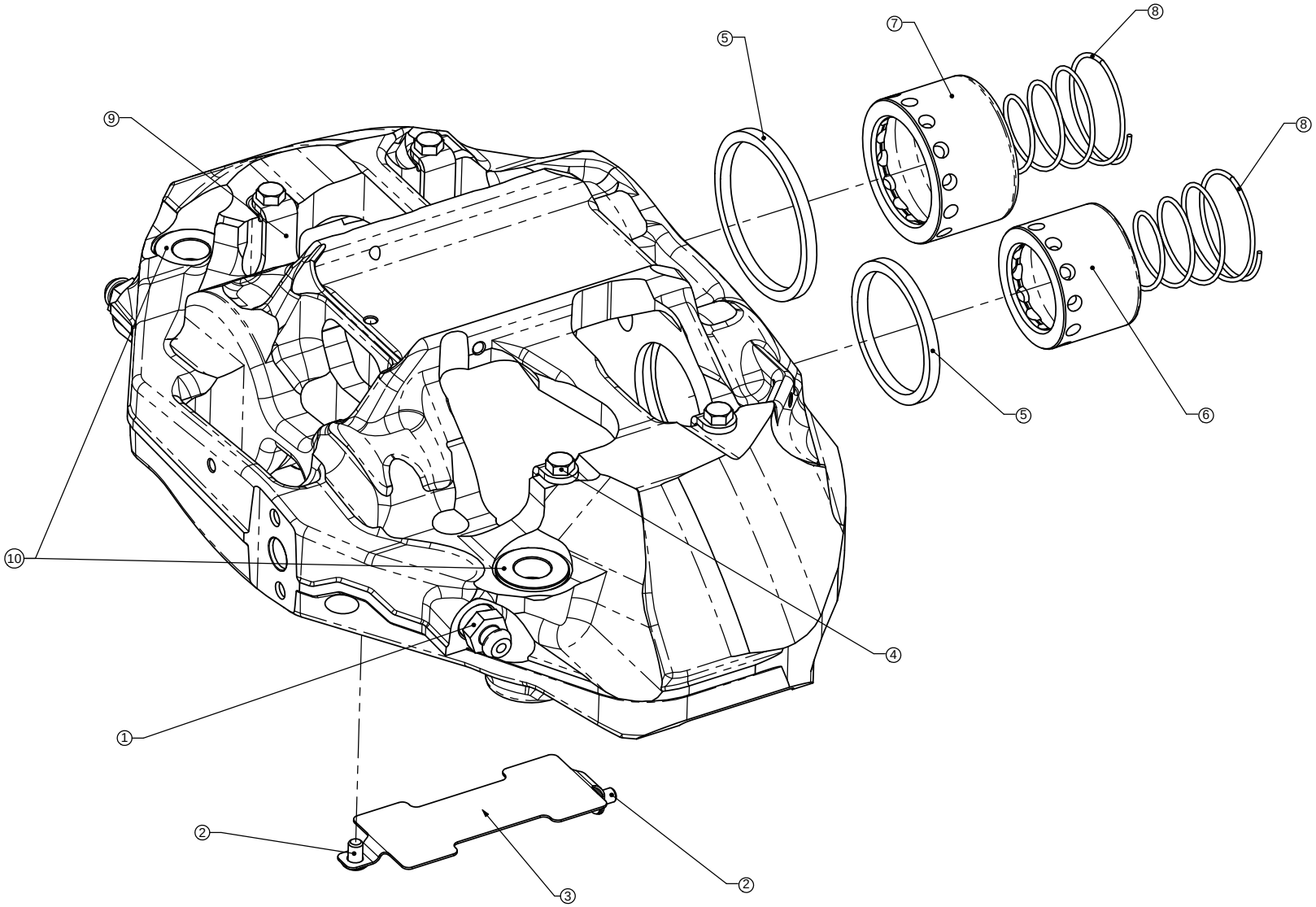

REF	PART NO.	DESCRIPTION	QTY PER CALIPER
1	CP3880-1	M10 BLEED SCREW KIT	1
2	CP3355-114	M4x0.7 BUTTON HEAD SCREW	2
3	CP6820-109	PAD RETAINER WEARPLATE	1
4	CP3215-115	M4x0.7 CAP SCREW	4
5	CP8518-GK	HIGH TEMP SEAL KIT	1
6	CP6820-106	1 3/8" SST PISTON	2
7	CP6820-107	1 5/8" SST PISTON	2
8	CP2667-105	4Lb AKB SPRING	4
9	CP6820-113	PAD ABUTMENT WEARPLATE	4
10	CP6720-162	TOP HAT BUSH	2

Issue No.	Alterations		Zone	Initials
	Date & No.	Particulars		

SCALE 1:2 | SHEET 3 OF 3

DRAWN: RSimpson

APPROVED:

DERIVED FROM:

TITLE
4-POT RALLY CALIPER
INSTALLATION DRAWING

DRG NO. CP6840-2CD